Thank you for purchasing this quality product. Be sure to check all packing material carefully for small parts that may have come loose inside the carton during shipment.

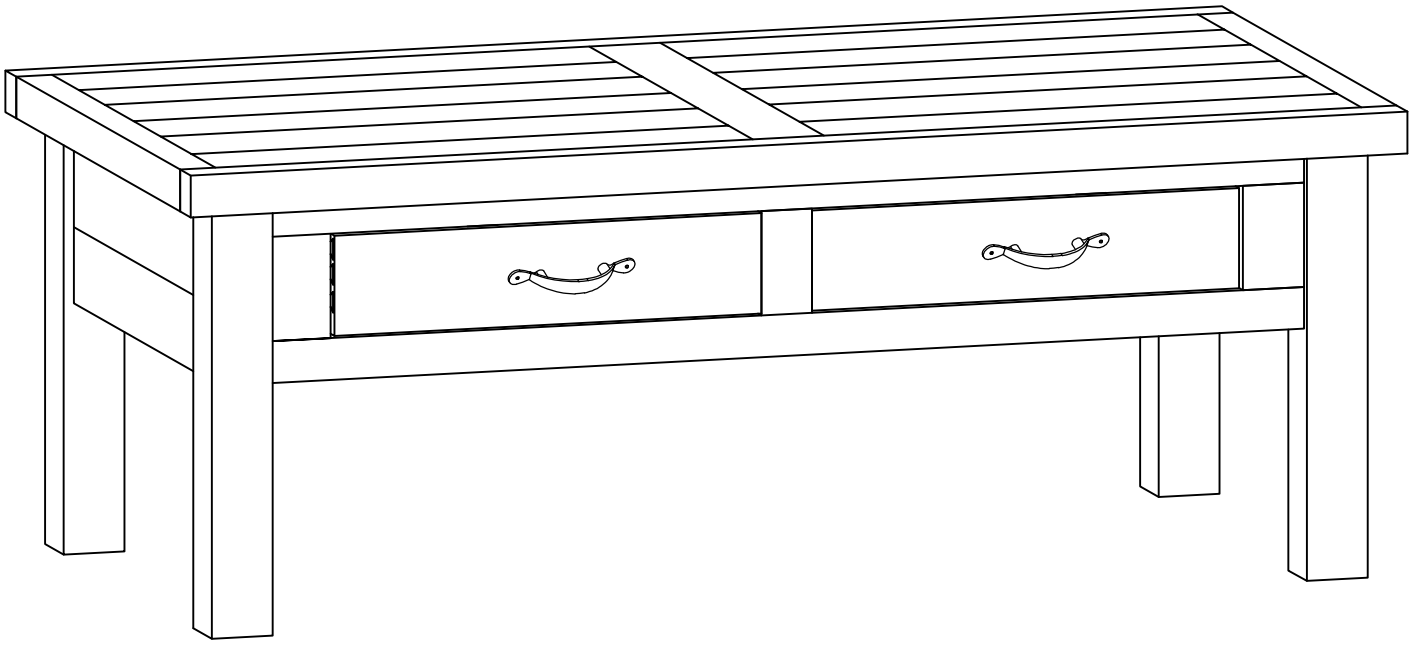

HARDWARE LIST

NO	DESCRIPTION		QTY
A		BOLT M8 X 60	8
B		WASHER M8	8
C		13mm HEX WRENCH	1
D		SPRING WASHER M8	8

PARTS LIST

NO	DESCRIPTION		QTY
1	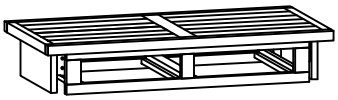	TABLE TOP	1
2	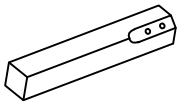	LEG	4
3	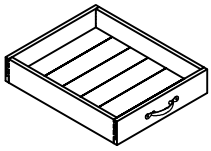	DRAWER	2

Thank you for purchasing this quality product. Be sure to check all packing material carefully for small parts that may have come loose inside the carton during shipment.

STEP 1

Assemble part (1)&(2)

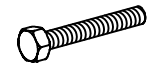

A:8

B:8

C:1

D:8

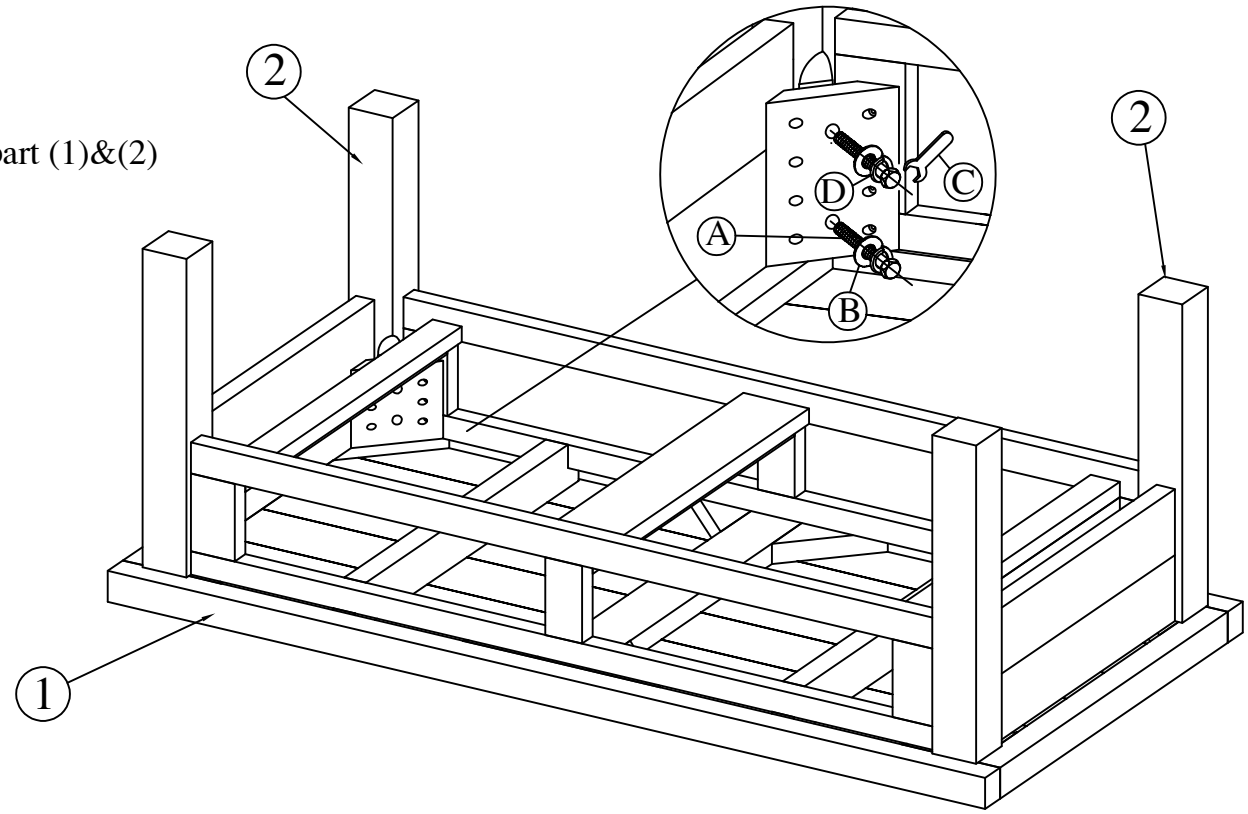

STEP 2

Assemble part (3)

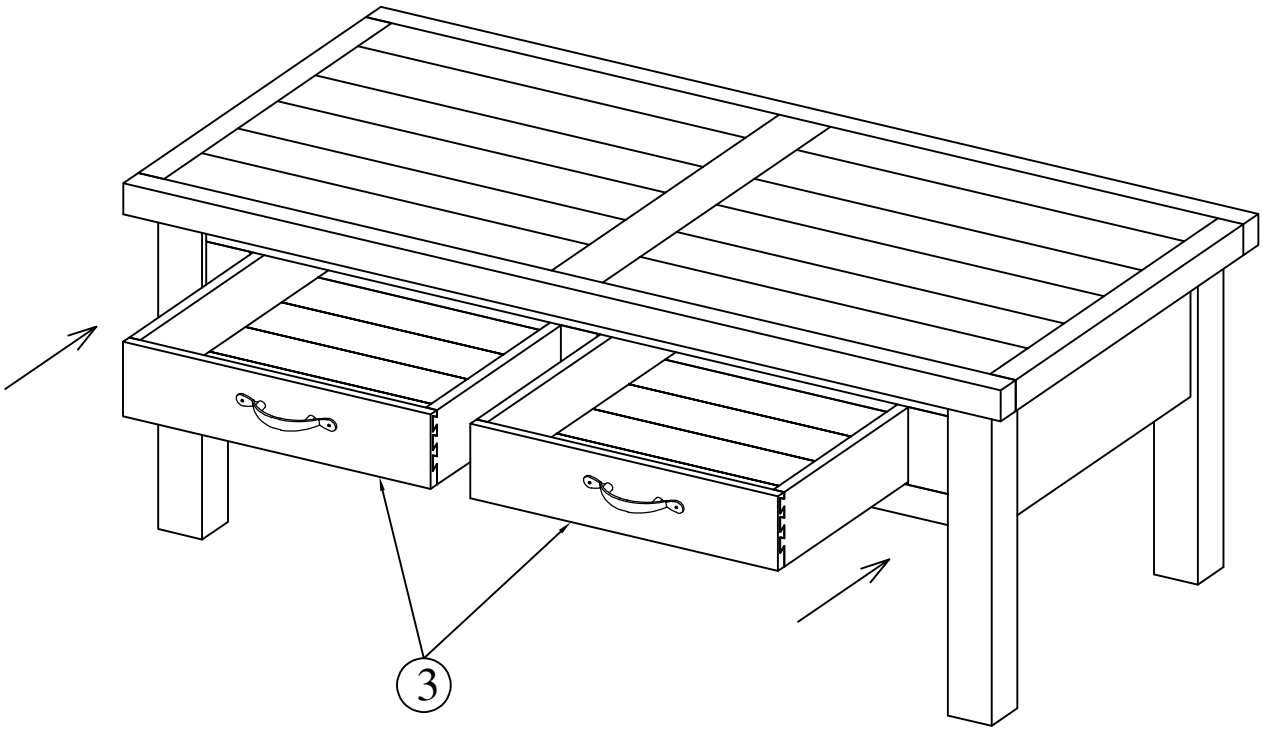

MADE IN VIETNAM